SPECIFICATION SHEET
V1.0



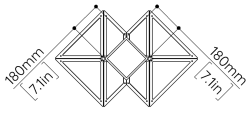

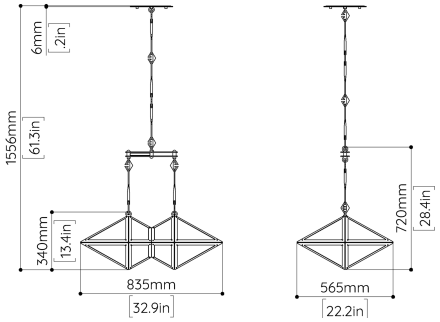

OPTION 1 (STANDARD)
Flush Canopy
Remote power supply

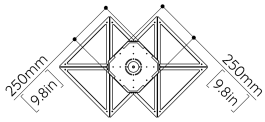

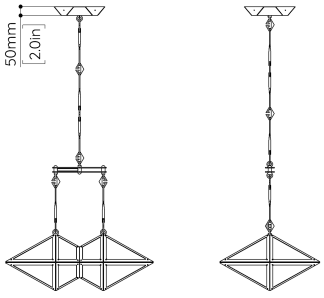

OPTION 2
Surface Canopy
Integral power supply
Upcharge applies

SENTIMENTAL 2 PENDANT

DESCRIPTION
"Sentimental" draws on a visit to the 1806 Palazzina Cinese in Palermo, Sicily--an eclectic fusion of Chinese-influenced ornament. The jagged lanterns and faceted, polygonal furniture inform Sentimental's repeated geometric form.

MATERIALS
Brass, Onyx, Aluminium, LED

DIMENSIONS
Length: 835mm (32.9")
Width: 565mm (22.2")
Height: 340mm (13.4")

WEIGHT
18.8kg (41.4lbs)

LAMPING
LED strip

LED COLOUR TEMP
Warm White 3000k
2700k Available upon request
No upcharge

VOLTAGE/WATTAGE
12V DC @ 38W

LUMENS/CRI
2850lm @ 90+ CRI*
*From the source

DRIVER
12V 40W 0-10V DIMMABLE

STANDARD FINISHES
Blonde Brass, Aged Brass, Dark Bronze (these finishes are waxed)

CUSTOM SURFACE FINISHES
Brushed Nickel, Chrome plating (Add 20%)
Clear enamel & powder coated finishes available on request (Add 10%)

ONYX OPTIONS
Honey Onyx, Green Onyx

MAINTENANCE
All LOST PROFILE metal surfaces are waxed. These metal surfaces are designed to age and patinate. Wear gloves when handling to avoid hand prints.

CHAIN & CEILING CANOPY
An overall drop of up to 1556mm (61.3") is included in the price. Please specify drop length required upon ordering.
Minimum Drop = 1056mm (18.4")
Drop heights are in 250mm (9.8") increments
Additional chain costs extra.

CEILING CANOPY
Option 1 - Standard: Flush Canopy: x1 Square Flush canopy (Remote)
180 x 180 x 6mm (7.1 x 7.1 x 0.2in).
Option 2 - Surface Canopy: x1 Surface canopy (Integral power supply)
250 x 250 X 50mm (9.8 x 9.8 x 2.0in). Upcharge applies.

DRIVERS & DIMMING
LOST PROFILE products are supplied with 0-10V dimmable LED drivers.
PHASE & DALI Dimmable drivers are available for some regions, upon request.
The location of the driver needs to be considered, whether in a ceiling cavity, in a wall cavity, or ideally in an accessible electrical cabinet.

PRICING & LEAD TIMES
Please contact us or your nearest LOST PROFILE representative for current pricing and lead times.

LOST PROFILE STUDIO

13 Warner Street, Coburg
North VIC 3058 AUSTRALIA

W www.lostprofile.net
E info@lostprofile.net